ZAXIS-5A series

HITACHI

Reliable solutions

ZAXIS 17U

Notes: Standard and optional equipment may vary by country, please consult your Hitachi dealer for details.
The machines shown on this brochure are so positioned for the sake of demonstrations. When leaving the machine, be sure to rest the bucket on the ground.

HYDRAULIC EXCAVATOR

Model Code : ZX17U-5A
Engine Rated Power : 10.6 kW (14.2 HP)
Operating Weight : Canopy 1 760 kg
Backhoe Bucket : ISO Heaped : 0.034 m³

Trustworthy and User-Friendly New Compact Excavators

ZAXIS Empower your Vision.

The new series of Hitachi compact excavators has evolved even further.
We listen to customers' needs, provide solutions, and adopt fresh ideas into our new products.
The outcome is reflected in our new excavators that are compact, productive and nimble.
The round body is smart and its wide-opening covers provide direct access to service points for quick maintenance.
The operator station is full of easy-to-use controls, an informative monitor, and a comfortable operator seat.

Operator Comfort

Prominent Advantages

High Performance

Easy Maintenance

Notes: The machines shown on this brochure are so positioned for the sake of demonstrations. When leaving the machine, be sure to rest the bucket on the ground.
The machine pictured here (facing pages) is equipped with optional piping, bucket with reinforced sides and bottom plates, and heavier counterweight 240 kg.

Comfort x High Performance

Operator Comfort and High Controllability

The work space is roomier than ever, despite being a mini excavator, while hydraulic pilot levers boost operating efficiency. The ZAXIS 17U is ready to get the job done on various job sites.

ROPS/OPG (TOP Guard) 3-Pillar Canopy

The rugged 3-pillar canopy effectively protect the operator against tipping and are ruggedly designed in accordance with the ROPS* standard. All models are protected with an OPG** top guard against falling objects.

*Roll-Over Protective Structure
**Operator Protective Guard

Hydraulic Pilot Control

Hydraulic pilot control levers provide light, smooth control of the front, blade, swing and travel. The levers are ergonomically arranged for easier and less tiring operation.

Large Roof with Rainwater Groove

A large-sized overhead roof protects the operator from sunlight and rain. Its rainwater groove drains rainwater to the rear.

Functional Work Space

Switches, engine control levers and similar are functionally laid out, with unskilled operators in mind. The bright LCD monitor is easy to read at a glance.

Adjustable Crawlers and Blade

Crawlers can be extended and retracted by control lever: retracted for truck transport and easy access to narrow job sites; and extended for surefooted excavation.

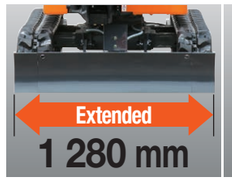

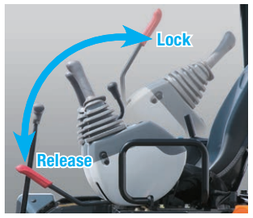

Neutral Engine Start System

The engine cannot start unless the shut-off lever is in the lock position for safe operation.

Theft Deterrent System (Optional)

The electronic immobilizer requires the entry of a password via the each time the engine is started to prevent theft and vandalism.

Powerful Clean Engine

This powerful engine yields more production than the conventional (ZX17U-2).

Wide Working Ranges

Notes: These specifications are for 3-pillar canopy, 0.93 m arm, 0.034 m³ bucket, 230 mm rubber shoes, and heavier counterweight 240 kg.

Easy Maintenance

Simplified Maintenance for Everyday Use

Wide-open covers give direct, quick access to main components for easy daily inspection and servicing, such as filter replacement.

Vertically Sliding Engine Cover

The upright engine cover, upgraded from the conventional model, slides vertically with less rearward projection for ease of maintenance in confined spaces.

Enlarged Refuel Port

The enlarged refuel port is adopted, like on the upper-classes, for quick refueling.

Easy Access for Engine Maintenance

With the seat tilted up, the top of engine is exposed for easy maintenance.

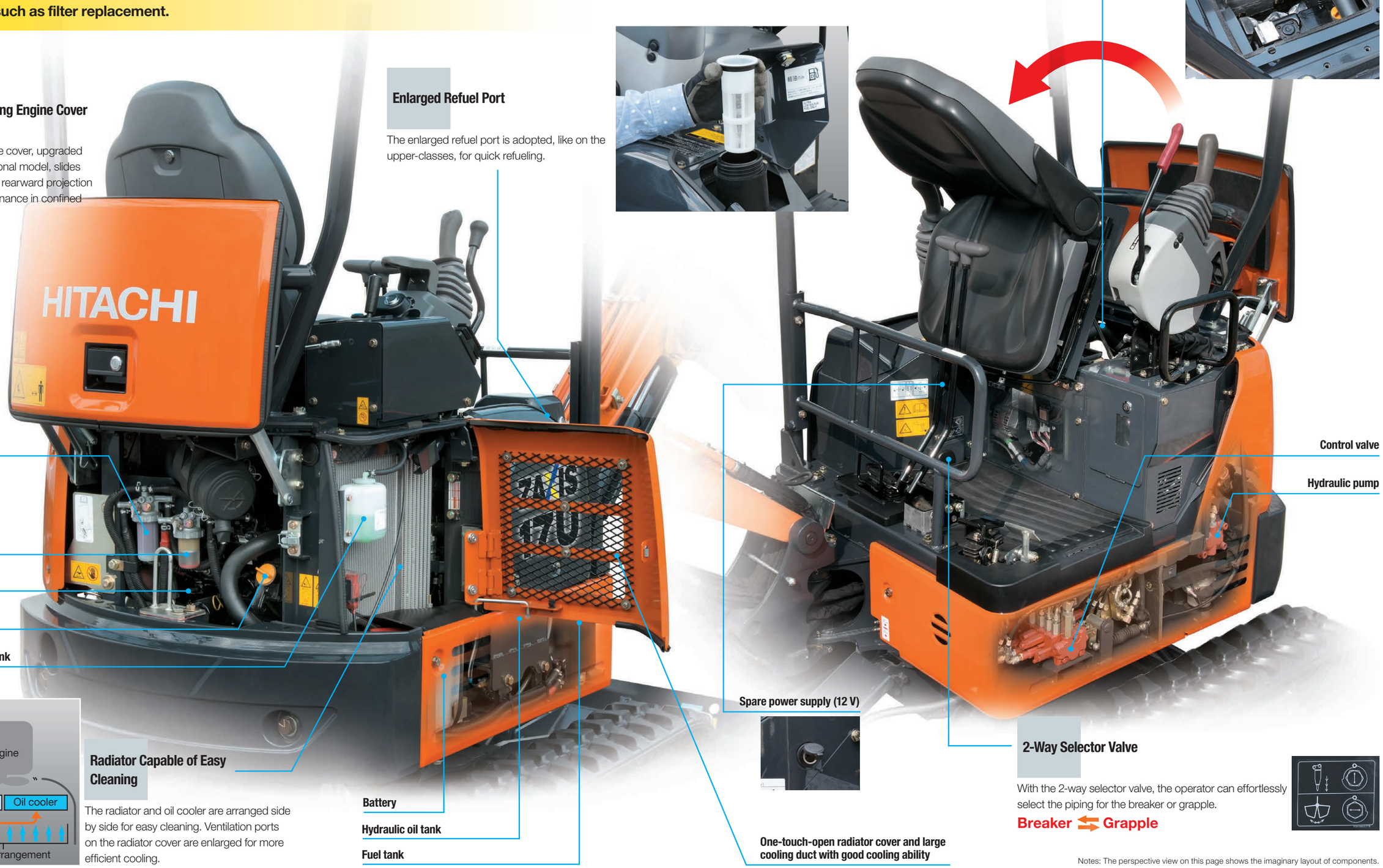

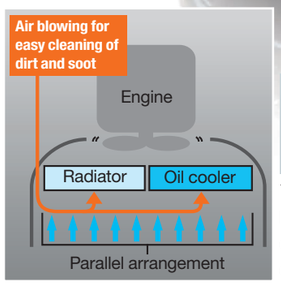

Radiator Capable of Easy Cleaning

The radiator and oil cooler are arranged side by side for easy cleaning. Ventilation ports on the radiator cover are enlarged for more efficient cooling.

2-Way Selector Valve

With the 2-way selector valve, the operator can effortlessly select the piping for the breaker or grapple.

Breaker ⇄ Grapple

Notes: The perspective view on this page shows the imaginary layout of components.

Quality x Durability

High Durability Backed by Stringent Quality Control

High-Quality Hitachi Products

Hitachi has been globally acclaimed for its technological prowess and high-performance products ever since the launch of its first hydraulic excavator in 1949. Its Design Division has adopted the 3D-CAD system for ease of analysis and data crunching to churn out quality products and slash development lead times.

Newly developed products have been vigorously tested in multiple ways, such as extended-hours of durability and evaluation tests, at a vast Hitachi 4,270,000 m² test field under critical operating conditions – for instance, tropical or freezing weather conditions – before unveiling new products.

Durable Flat Bottom Bucket

This widely acclaimed flat bottom bucket, comes as a standard item to protect welds on the bucket bottom from wearing. Wide wear plates are also welded to the bucket bottom protection increase durability.

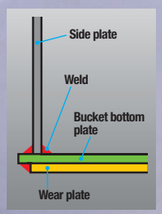

Durable Front Attachment

At the pin joints of the front, clearance fit gets tighter to reduce jolt and noise, and increase durability.

Grease-retained HN bushings at pins allow for long 500-hour lubricating intervals. Main hoses at the swing post are covered with a hose protector. The boom cylinder is protected with a cylinder cover to increase durability.

SPECIFICATIONS

ENGINE

Model 3TNV70
Type ..... Water-cooled, 4-cycle, swirl combustion chamber injection type diesel engine
No. of cylinders 3
Rated power
ISO 9249, net ..... 10.6 kW (14.2 HP) at 2 400 min^{-1} (rpm)
EEC 80/1269, net ..... 10.6 kW (14.2 HP) at 2 400 min^{-1} (rpm)
SAE J1349, net ..... 10.6 kW (14.2 HP) at 2 400 min^{-1} (rpm)
Maximum torque ..... 48.8 Nm (49.8 kgfm) at 1 800 min^{-1} (rpm)
Piston displacement ..... 0.854 L
Bore and stroke ..... 70 mm x 74 mm
Batteries ..... 1 × 12 V / 36 Ah

HYDRAULIC SYSTEM

Hydraulic Pumps

Main pumps ..... 2 variable displacement axial piston pumps
1 gear pump
Maximum oil flow ..... 2 x 19.2 L/min
1 x 10.8 L/min
Pilot pump ..... 1 gear pump
Maximum oil flow ..... 6.5 L/min

Hydraulic Motors

Travel ..... 2 variable displacement axial piston motors
Swing ..... 1 gear motor

Relief Valve Settings

Implement circuit ..... 20.6 MPa (210 kgf/cm^2)
Swing circuit ..... 13.7 MPa (140 kgf/cm^2)
Travel circuit ..... 20.6 MPa (210 kgf/cm^2)
Pilot circuit ..... 3.9 MPa (40 kgf/cm^2)

Hydraulic Cylinders

	Quantity	Bore	Rod diameter	Stroke
Boom (3-Pillar canopy)	1	60 mm	35 mm	435 mm
Arm	1	55 mm	30 mm	406 mm
Bucket	1	55 mm	30 mm	311 mm
Blade	1	65 mm	35 mm	94 mm
Boom swing	1	60 mm	30 mm	298 mm
Span	1	50 mm	30 mm	312 mm

UPPERSTRUCTURE

Swing Device

The axial piston motor with planetary reduction gear is bathed in oil and the swing circle is single-row. The swing parking brake is of the spring-set/hydraulic-released disc type.

Swing speed ..... 9.4 min^{-1} (rpm)
Swing torque ..... 1.7 kNm (173 kgfm)

UNDERCARRIAGE

Tracks

Tractor-type undercarriage. Welded track frame using selected materials. Side frame extended by cylinder span.

Numbers of Rollers on Each Side

Lower rollers 3

Travel Device

Each track driven by a 2-speed axial piston motor.
Parking brake is of the spring-set/hydraulic-released disc type.

Travel speeds ..... High : 0 to 4.2 km/h
Low : 0 to 2.4 km/h

Maximum traction force ... 11.4 kN (1 160 kgf)

Gradeability ..... 47% (25 degree) continuous

SERVICE REFILL CAPACITIES

Fuel tank .....20.0 L
Engine coolant .....2.7 L
Engine oil ..... 3.1 L
Travel device (each side) ..... 0.25 L
Hydraulic system ..... 26.0 L
Hydraulic oil tank ..... 14.0 L

WEIGHTS AND GROUND PRESSURE

Operating Weight and Ground Pressure

3-PILLAR CANOPY

Including 1.82 m boom and 0.034 m^3 bucket (ISO heaped) counterweight 120 kg and extra piping.

Shoe type	Shoe width	Arm length	kg	kPa(kgf/cm^2)
Rubber shoe	230 mm	0.93 m	1 760 *	26.6 (0.27)

* Operating weight fully serviced, +75 kg operator ISO 6016.

3-PILLAR CANOPY

Including 1.82 m boom and 0.034 m^3 bucket (ISO heaped) heavier counterweight 240 kg and extra piping.

Shoe type	Shoe width	Arm length	kg	kPa(kgf/cm^2)
Rubber shoe	230 mm	0.93 m	1 880 *	28.7 (0.29)

* Operating weight fully serviced, +75 kg operator ISO 6016.

BUCKET AND ARM DIGGING FORCE

Arm length	0.93 m
Bucket digging force ISO	16.0 kN (1 630 kgf)
Bucket digging force SAE : PCSA	12.5 kN (1 270 kgf)
Arm crowd force ISO	8.6 kN (880 kgf)
Arm crowd force SAE : PCSA	7.9 kN (810 kgf)

BACKHOE ATTACHMENTS

Boom and arm are of welded, box-section design. A 1.82 m boom and 0.93 m arm are available.

Buckets

Capacity	Width		No. of teeth	Weight	Recommendation
ISO heaped	Without side cutters	With side cutters			Arm 0.93 m
0.019 m^3	250 mm	300 mm	3	32.0 kg	○
0.024 m^3	300 mm	350 mm	3	35.0 kg	○
0.029 m^3	350 mm	400 mm	3	37.0 kg	○
0.034 m^3	400 mm	450 mm	3	39.0 kg	○
0.039 m^3	450 mm	500 mm	3	41.0 kg	□

○ Suitable for materials with density of 2 000 kg/m^3 or less
□ Suitable for materials with density of 1 600 kg/m^3 or less

SPECIFICATIONS

WORKING RANGES

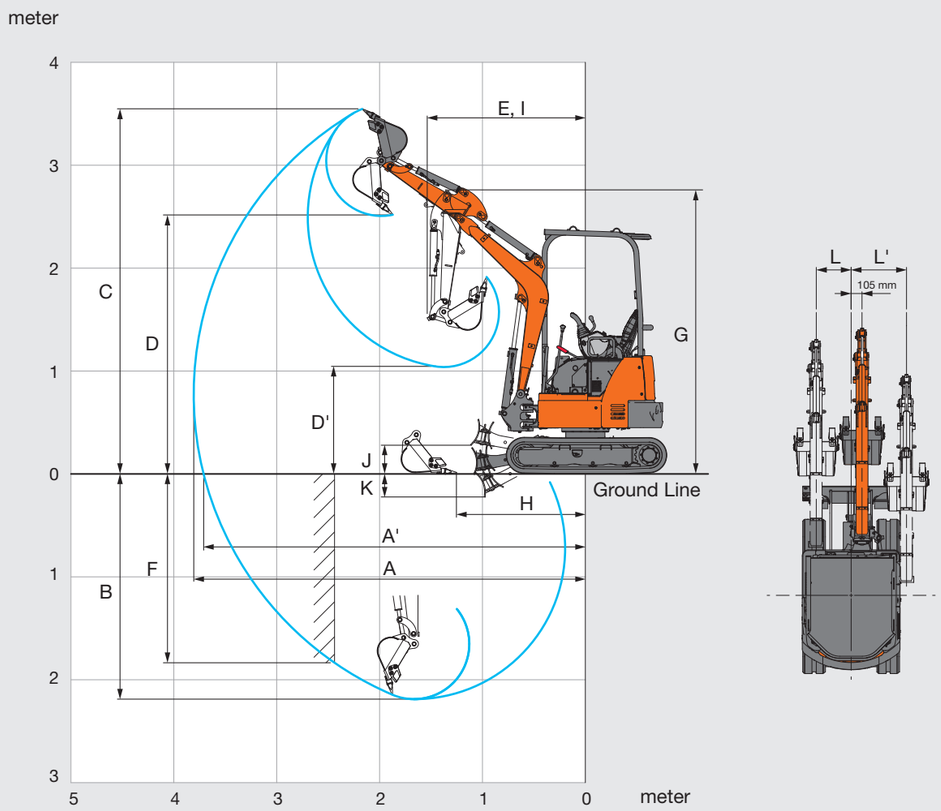

This illustration shows with 0.93 m arm, 0.034 m³ bucket, 230 mm rubber shoes, and heavier counterweight 240 kg.

Unit: mm

	ZX17U-5A
	Arm 0.93 m
	3-Pillar Canopy
A Max. digging reach	3 810
A' Max. digging reach (on ground)	3 720
B Max. digging depth	2 190
C Max. cutting height	3 540
D Max. dumping height	2 510
D' Min. dumping height	1 040
E Min. swing radius	1 530
F Max. vertical wall digging depth	1 840
G Front height at Min. swing radius	2 770
H Min. level crowding distance	1 230
I Working radius at Min. swing radius (Max. boom-swing angle)	1 060
J Blade bottom highest position above ground	285
K Blade bottom lowest position above ground	225
L/L' Offset distance	355 / 555
Max. boom-swing angle (deg.)	70 / 50

DIMENSIONS

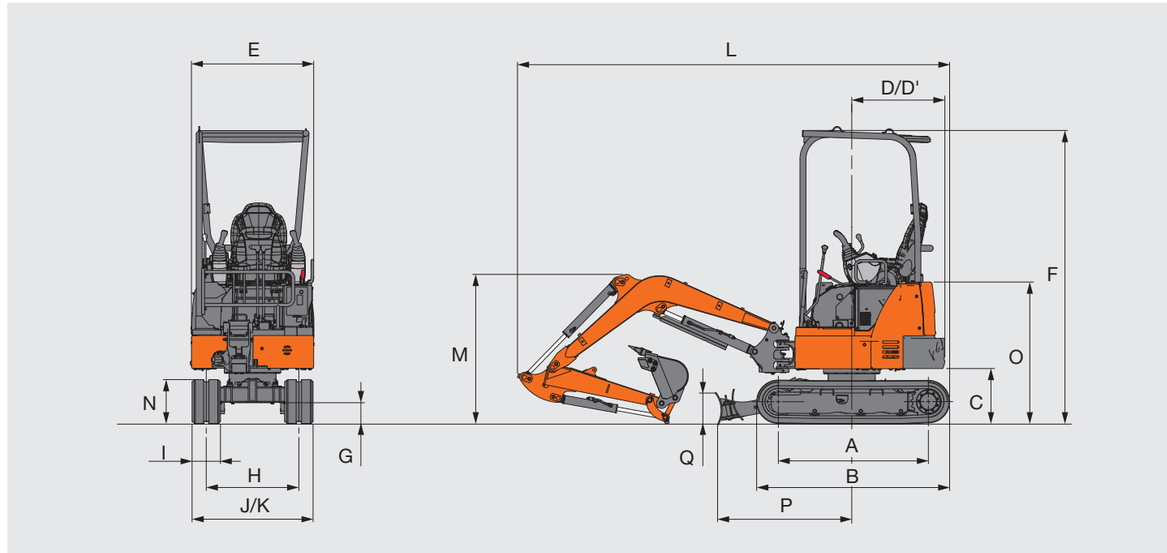

This illustration shows with 0.93 m arm, 0.034 m³ bucket, 230 mm rubber shoes, and heavier counterweight 240 kg.

Unit: mm

	ZX17U-5A
	3-Pillar Canopy
A Distance between tumblers	1 210
B Undercarriage length	1 570
C Counterweight clearance	450
D Rear-end swing radius	755 (680)
D' Rear-end length	755 (680)
E Overall width of upperstructure	990
F Overall height of cab	2 380
G Min. ground clearance	165
H Track gauge (Retract / Extend)	750 / 1 050
I Track shoe width	230
J Undercarriage (Blade) width (Retract / Extend)	980 / 1 280
K Overall width (Retract / Extend)	990 / 1 280
L Overall length	3 500
M Overall height of boom	1 210
N Track height	370
O Engine cover-height	1 150
P Horizontal distance to blade	1 090
Q Blade height	260

Data in ( ) are dimensions of counterweight 120 kg.

LIFTING CAPACITIES (Without bucket)

Notes:
1. Ratings are based on ISO 10567.
2. Lifting capacity does not exceed 75% of tipping load with the machine on firm, level ground or 87% full hydraulic capacity.
3. The load point is the center-line of the bucket pivot mounting pin on the arm.
4. *Indicates load limited by hydraulic capacity.
5. 0 m = Ground.

For lifting capacities, subtract bucket and quick hitch weight from lifting capacities without bucket.

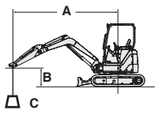

A: Load radius
B: Load point height
C: Lifting capacity

ZX17U-5A 3-Pillar Canopy Version, Blade above Ground

Rating over-front | Rating over-side or 360 degrees | Unit: 1 000 kg

Conditions	Load point height m	Load radius 1.0 m		2.0 m		3.0 m		At max. reach		
										meter
Boom 1.82 m Arm 0.93 m Counterweight 120 kg Rubber shoe 230 mm	2							0.26	0.25	2.98
	1			0.45	0.42	0.25	0.23	0.22	0.21	3.27
	0 (Ground)			0.42	0.39	0.24	0.22	0.22	0.21	3.15
	-1	*1.12	*1.12	0.42	0.39			0.30	0.28	2.58

ZX17U-5A 3-Pillar Canopy Version, Blade on Ground

Rating over-front | Rating over-side or 360 degrees | Unit: 1 000 kg

Conditions	Load point height m	Load radius 1.0 m		2.0 m		3.0 m		At max. reach		
										meter
Boom 1.82 m Arm 0.93 m Counterweight 120 kg Rubber shoe 230 mm	2							*0.40	0.25	2.98
	1			*0.70	0.42	*0.44	0.23	*0.41	0.21	3.27
	0 (Ground)			*0.81	0.39	*0.46	0.22	*0.42	0.21	3.15
	-1	*1.12	*1.12	*0.63	0.39			*0.42	0.28	2.58

ZX17U-5A 3-Pillar Canopy Version, Blade above Ground

Rating over-front | Rating over-side or 360 degrees | Unit: 1 000 kg

Conditions	Load point height m	Load radius 1.0 m		2.0 m		3.0 m		At max. reach		
										meter
Boom 1.82 m Arm 0.93 m Heavier counterweight 240 kg Rubber shoe 230 mm	2							0.30	0.29	2.98
	1			0.52	0.49	0.29	0.28	0.26	0.24	3.27
	0 (Ground)			0.50	0.46	0.28	0.27	0.26	0.25	3.15
	-1	*1.12	*1.12	0.50	0.46			0.35	0.33	2.58

ZX17U-5A 3-Pillar Canopy Version, Blade on Ground

Rating over-front | Rating over-side or 360 degrees | Unit: 1 000 kg

Conditions	Load point height m	Load radius 1.0 m		2.0 m		3.0 m		At max. reach		
										meter
Boom 1.82 m Arm 0.93 m Heavier counterweight 240 kg Rubber shoe 230 mm	2							*0.40	0.29	2.98
	1			*0.70	0.49	*0.44	0.28	*0.41	0.24	3.27
	0 (Ground)			*0.81	0.46	*0.46	0.27	*0.42	0.25	3.15
	-1	*1.12	*1.12	*0.63	0.46			*0.42	0.33	2.58

EQUIPMENT

Standard and optional equipment may vary by country, so please consult your Hitachi dealer for details.

● : Standard equipment ○ : Optional equipment

ENGINE

Air cleaner double filters	●
Cartridge-type engine oil filter	●
Dust-proof indoor net	○
Fuel main filter	●
Radiator reserve tank	●
Water-separator for engine fuel	●

HYDRAULIC SYSTEM

Full-flow filter	●
Hydraulic pilot type control levers	●
Overload relief valve	○
Pilot control shut-off lever with neutral engine start system	●
Pilot filter	●
Suction filter	●
Swing parking brake	●
Travel parking brake	●
Two-speed travel system	●
Valve for extra piping	●

3-PILLAR CANOPY

Anti-slip plate	●
Arm rests	●
Electric horn	●
Floor mat	●
ROPS/OPG canopy	●
Seat belt	●
Spare power supply	●
Suspension seat	●

UPPER STRUCTURE

Counterweight 120 kg	●
Heavier counterweight 240 kg	○
Travel motion alarm	○

UNDERCARRIAGE

Retractable undercarriage	●
Rubber shoe 230 mm	●

FRONT ATTACHMENTS

Arm 0.93 m	●
Boom 1.82 m	●
Extra piping	○
HN bushing	●

MISCELLANEOUS

Theft deterrent system*	○

* Hitachi Construction Machinery cannot be held liable for theft, any system will just minimize the risk of theft.

Built on the foundation of superb technological capabilities, Hitachi Construction Machinery is committed to providing leading-edge solutions and services to contribute as a reliable partner to the business of customers worldwide.

Hitachi Environmental Vision 2050

Our Environmental Vision envisions a low-carbon society; a resource efficient society; a harmonized society with nature. To achieve such a sustainable society, we have established a set of long-term environmental targets called Hitachi Environmental Innovation 2050.

Reducing Environmental Impact by New ZAXIS

Hitachi makes a green way to cut carbon emissions for global warming prevention according to LCA*. New ZAXIS utilizes lots of technological advances, including the new ECO mode, and Isochronous Control. Hitachi has long been committed to recycling of components, such as aluminum parts in radiators and oil cooler. Resin parts are marked for recycling.

*Life Cycle Assessment – ISO 14040

These specifications are subject to change without notice.
Illustrations and photos show the standard models, and may or may not include optional equipment, accessories, and all standard equipment with some differences in color and features.
Before use, read and understand the Operator's Manual for proper operation.

Hitachi Construction Machinery Co., Ltd.
www.hitachicm.com

KS-EN282U 22.02 (KA/SO,HT3)